MMT

REACH SUBSEA

The new generation pipeline surveys

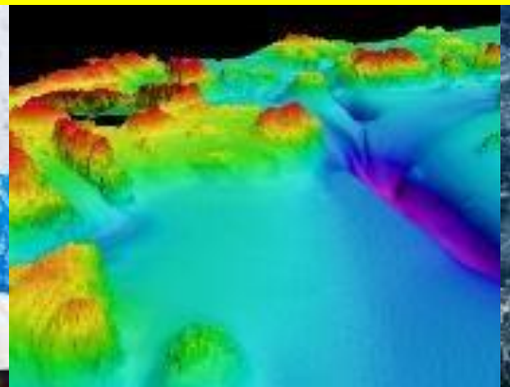

MMT

Founded in 1976

Offices in Gothenburg, Sweden

& Banbury, UK

250 + staff
7 Survey & ROV vessels

Reach Subsea AS

Founded 2008
Office in Haugesund
65 + staff 6 WROVs 4 DP2 vessels

MMT and Reach COOPERATION SINCE 2013

MMT

“OUR SERVICES AND RESOURCES ARE EXTENSIVE. WE DELIVER COST EFFICIENT AND SAFE SOLUTIONS”

We presently are contracted by STATOIL, DONG, NordStream, ExxonMobil, Lundin Oil, Nexans, Statnett, Prysmian and EMAS.

Survey Services Oil & Gas

Route Surveys
Pre and Post lay surveys
Pipeline inspections
Site surveys
UXO Surveys

REACH SUBSEA

MMT

EDDA FONN

- 3 year charter from Østensjø, from december 2014.
- Well-known in the market and by ourselves.
- 100 Te Crane
- 1 Kystdesign WROV system in hangar
- Accomodation for 66 persons

Pipeline survey today

ROV based

Information collected:

- Centre video
- Port and Starboard video
- Multibeam bathymetry
- Side Scan
- Depth of Burial tools
- Cathodic protection measuring device
- And so on.....

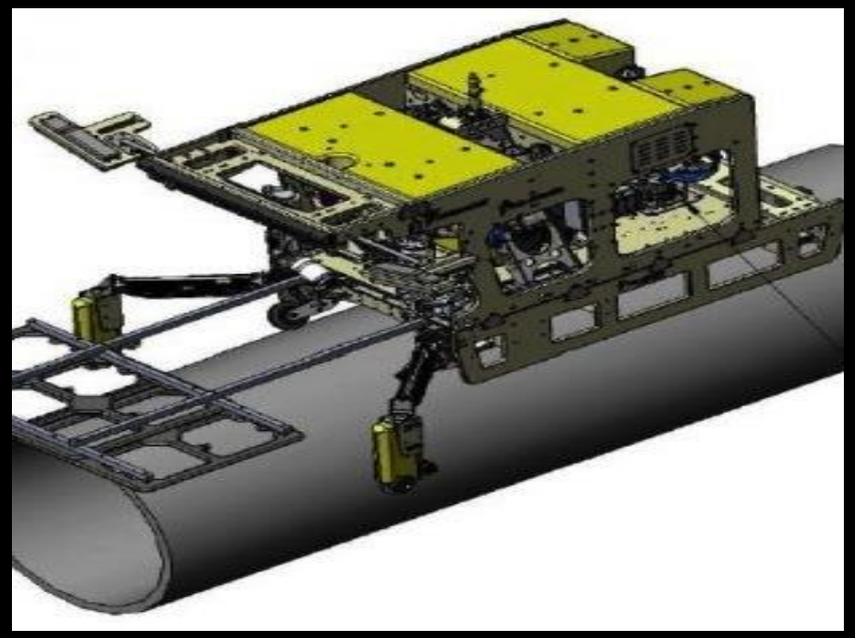

REACH SUBSEA

MMT

Production

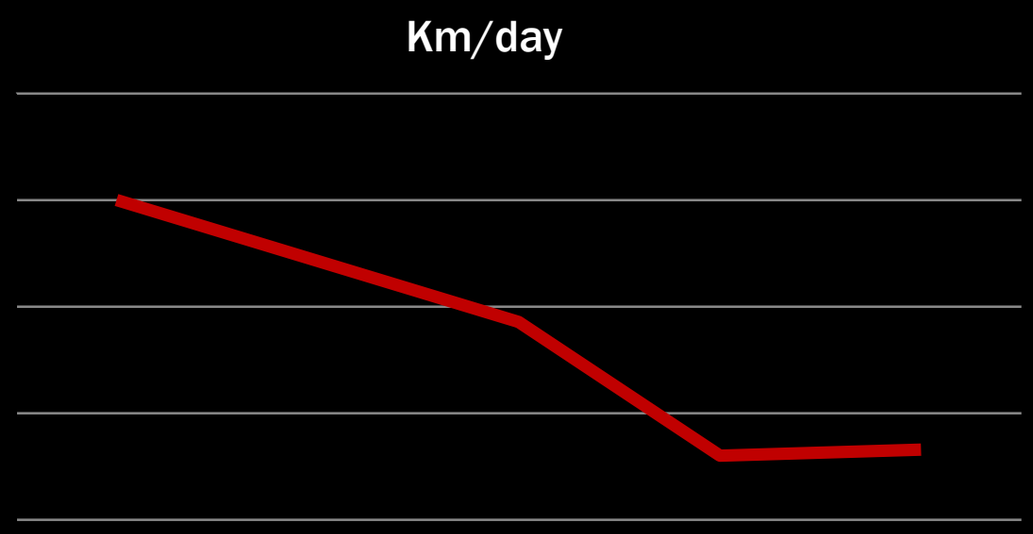

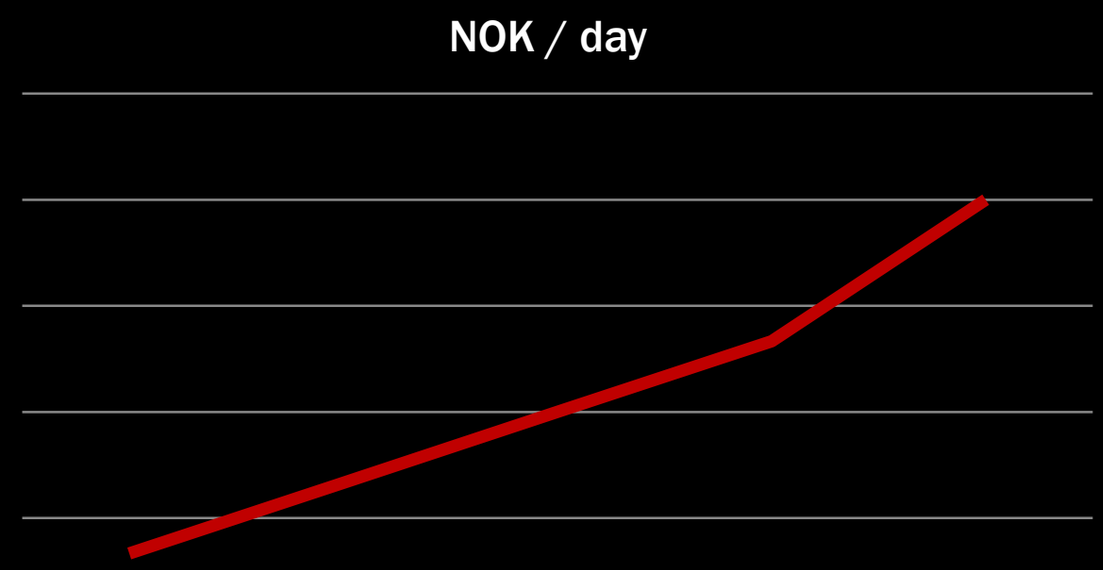

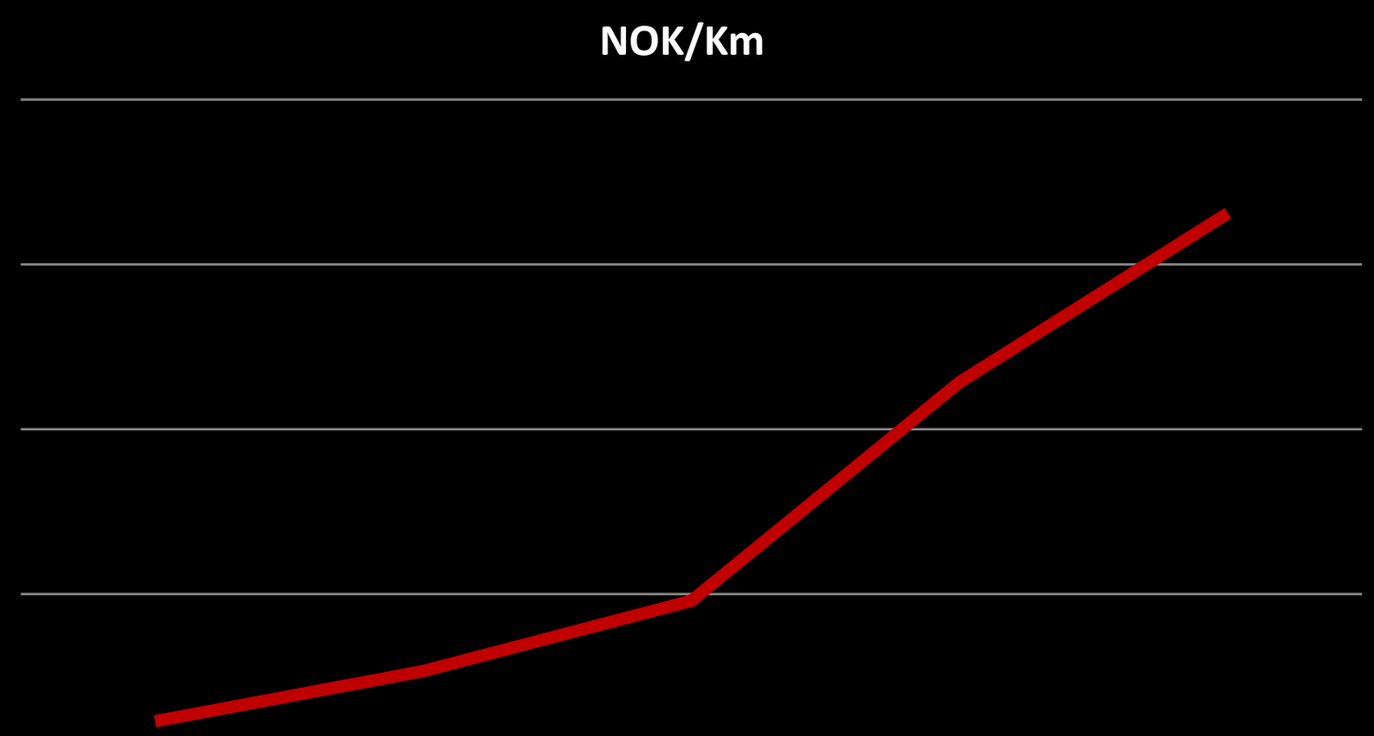

REACH SUBSEA

MMT

The record hasn’t always been straight

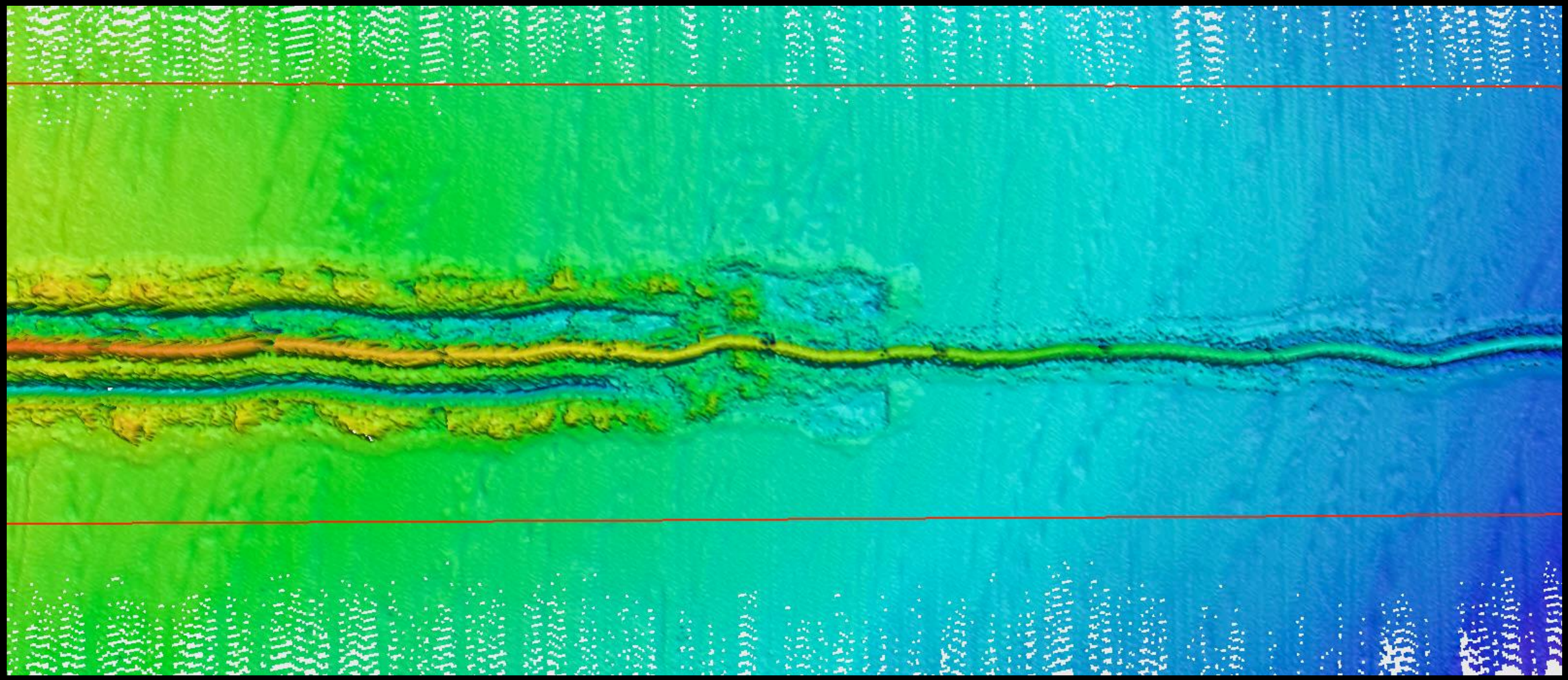

Nord Stream Trench Data

REACH SUBSEA

MMT

MMT

REACH
SUBSEA

KYSTDESIGN

Design criteria

Weight	4200 kg
Power	4 000 V
Propulsion	225 Hp
Dimension	5m x 2.5m x 0.8m (3.6 w with wings)
Payload	700 kg
Speed	8 knots
Operative depth	10-2000 m
Multibeam	Kongsberg 2040 Quad
Integrated Video & Photo	Cathx Ocean
Laser bathymetry	Cathx Ocean
3D imagery	
Stereo Imagery	
Cutting edge positioning systems.	Sonardyne iUSBL
Full redundancy INS IxBlue ROVINS & Sonardyne Sprint DVL	
SSS & SBP	Edgetech
Navigation & Reporting	Eiva NaviPac

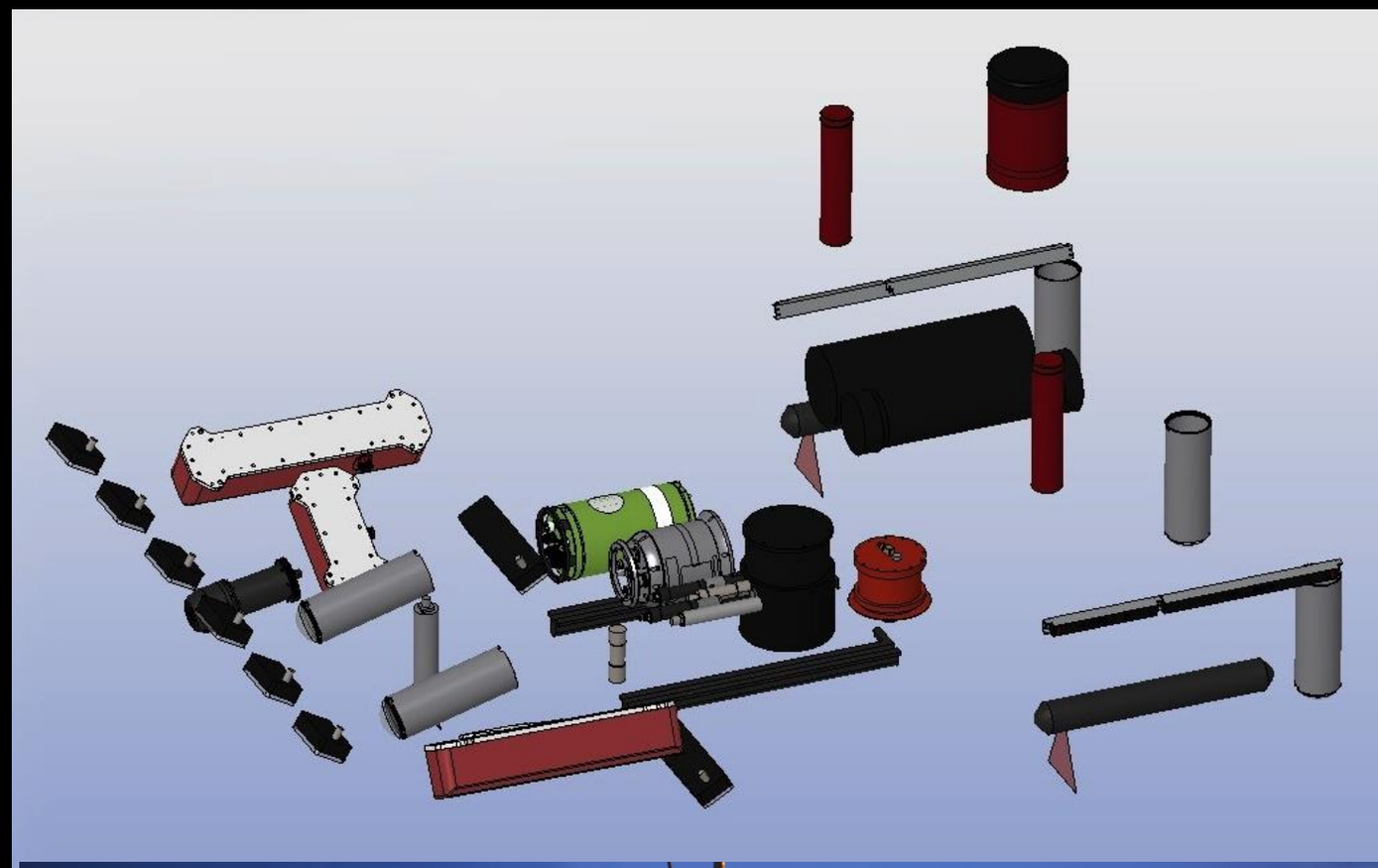

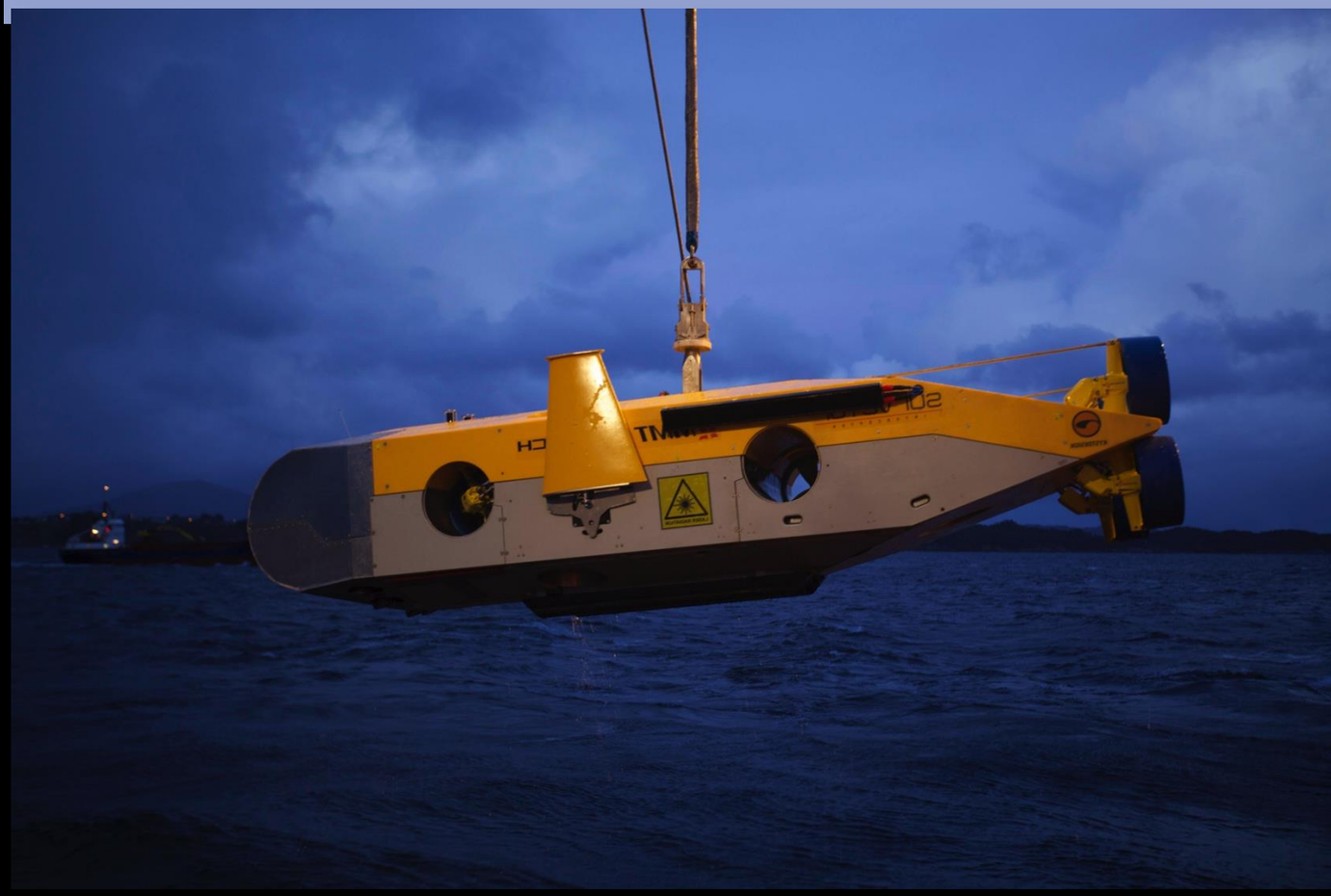

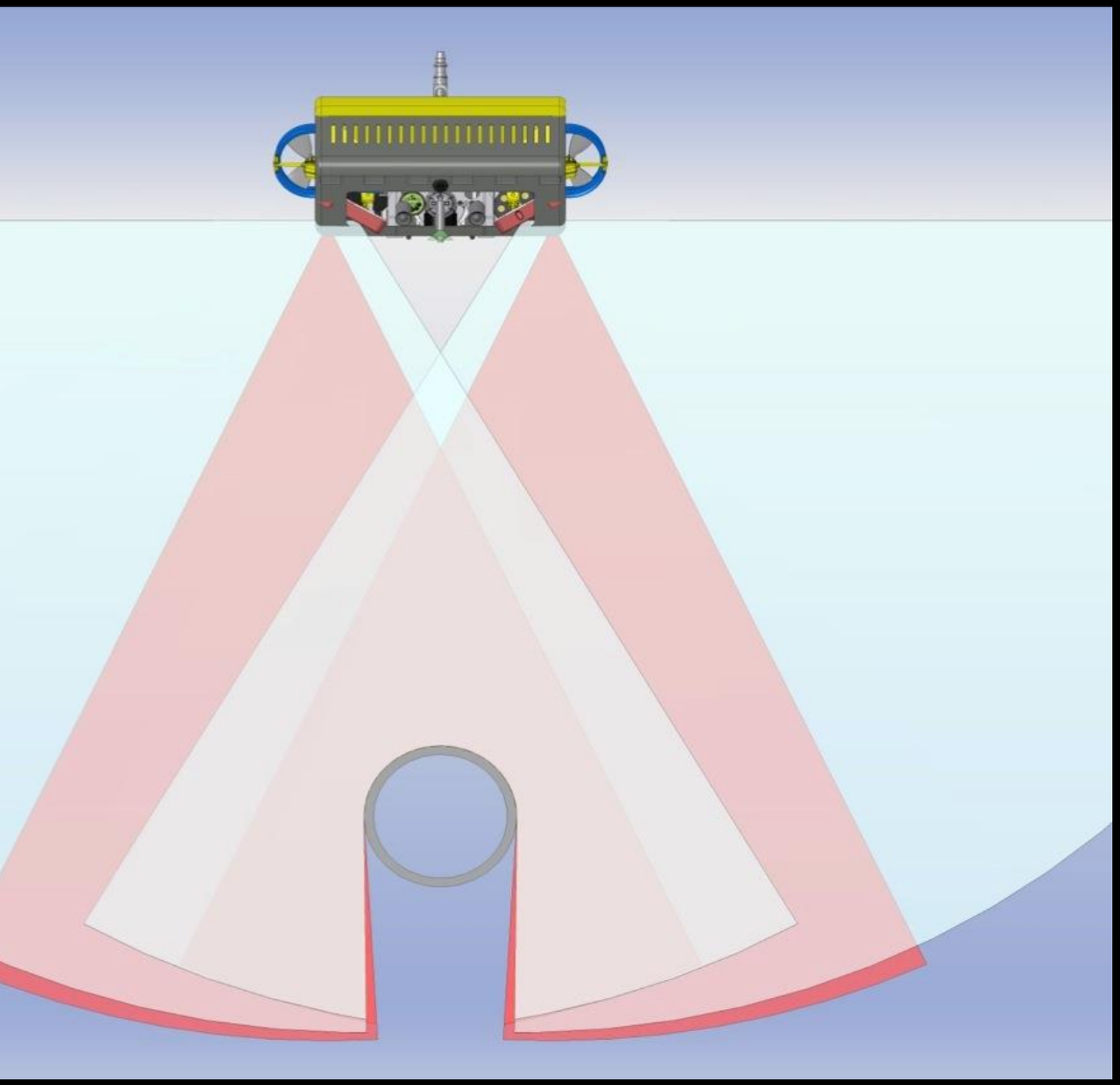

48” pipe 5 m above

Pipe coverage

Kongsberg EM 2040 Quadro multibeam In fixed mounting ensures ultra high resolution multibeam out to 40 m coverage at 5 m height.

2 Laser systems tilted inwards ensures extreme resolution and coverage of the immediate pipeline and 2 m to each side.

In combination the modeling will be far better than anything on the market today at a much higher speed.

REACH SUBSEA

MMT

Surveyor Interceptor SROV

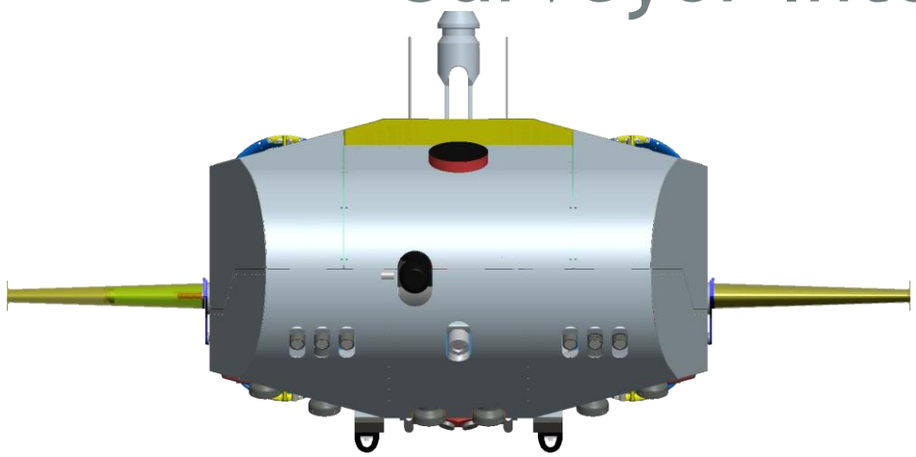

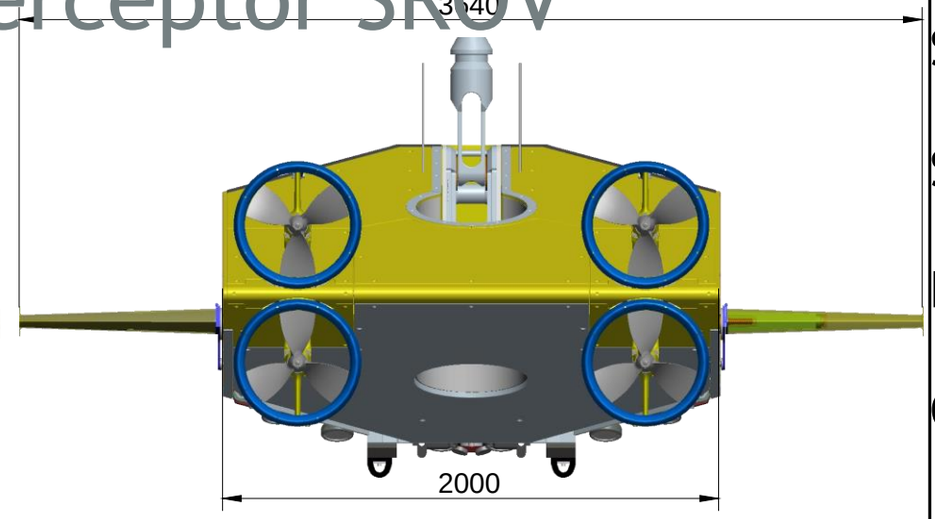

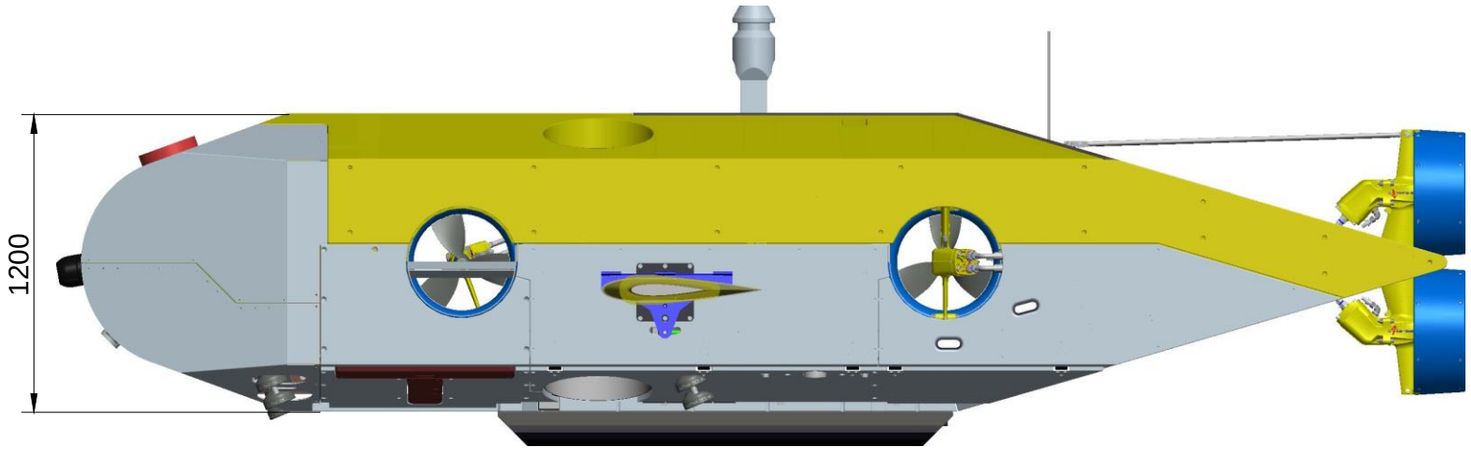

SCALE 1:25

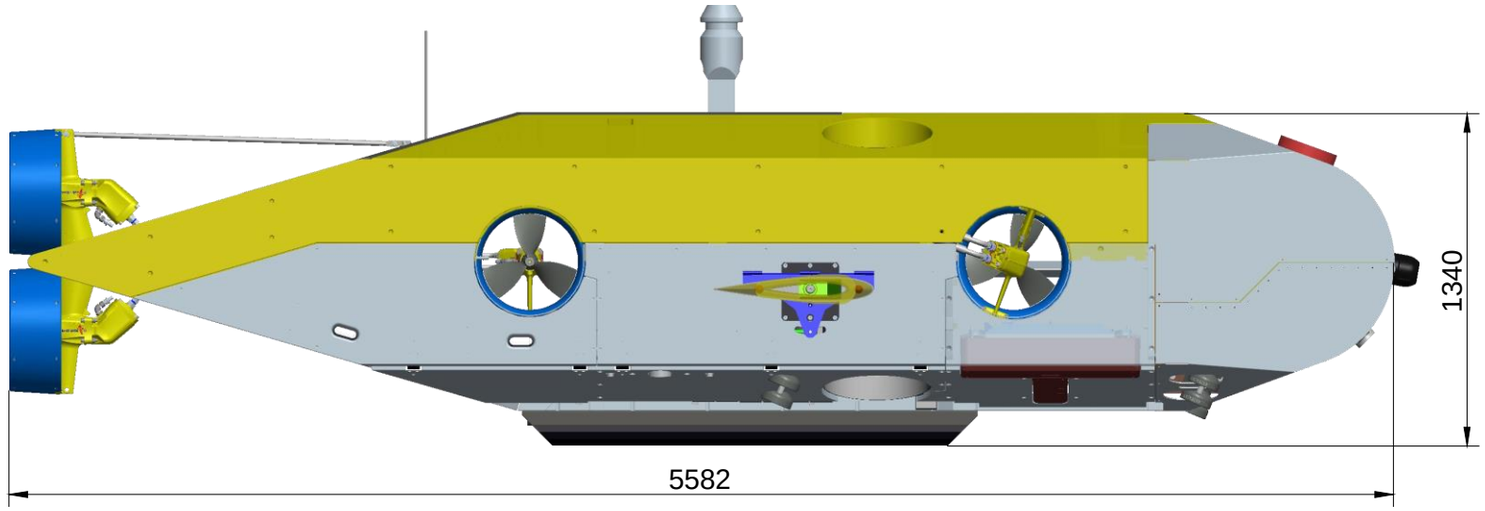

- Superior Images
- Superior Data
- Best Positioning
- Ovality mapping
- Automated feature detetction
- More than double speed
- Substantially reduced cost

Better asset management

Itm.	Qty.	Description	Drg. / Spec.	Material

Rev.	Date	Description	Prep	Chk	App
A	16.07.14	ISSUED FOR COMMENTS	AHO	EKB	EKB

KYSTDESIGN
SUB-SEA TECHNOLOGY

SURVEYOR

Drawing title
SURVEYOR
GA
-

Size
A3

KYSTDESIGN AS
Strandgaten 202, 5525 Haugesund, NORWAY
Tel: +47 52 70 62 50
Fax: +47 52 70 62 01
www.kystdesign.no

Scale

Sheet 1 of 1

File name AE95-1000M10

in the information contained therein. Reproduction, use or disclosure to third parties without consent is strictly forbidden.
© KYSTDESIGN AS

REACH SUBSEA

MMT

Test Area

Europipe 2

Dec 2014

Jan 2015

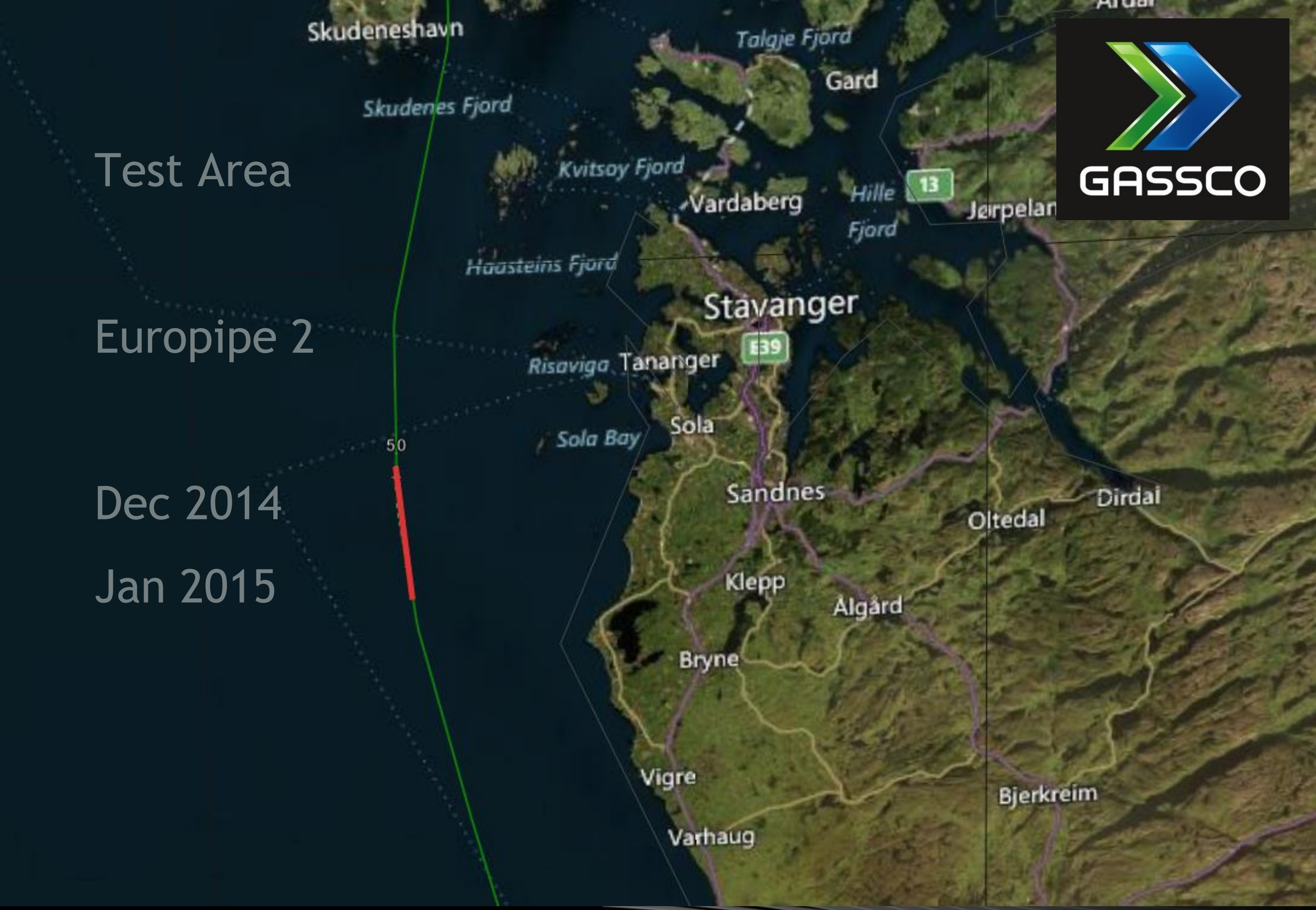

GASSCO

REACH SUBSEA

MMT

REACH SUBSEA

MMT

REACH SUBSEA

MMT

REACH SUBSEA

MMT

Laser bathymetry

Cathx Ocean 4 kn 7.4 km/h 2 m altitude

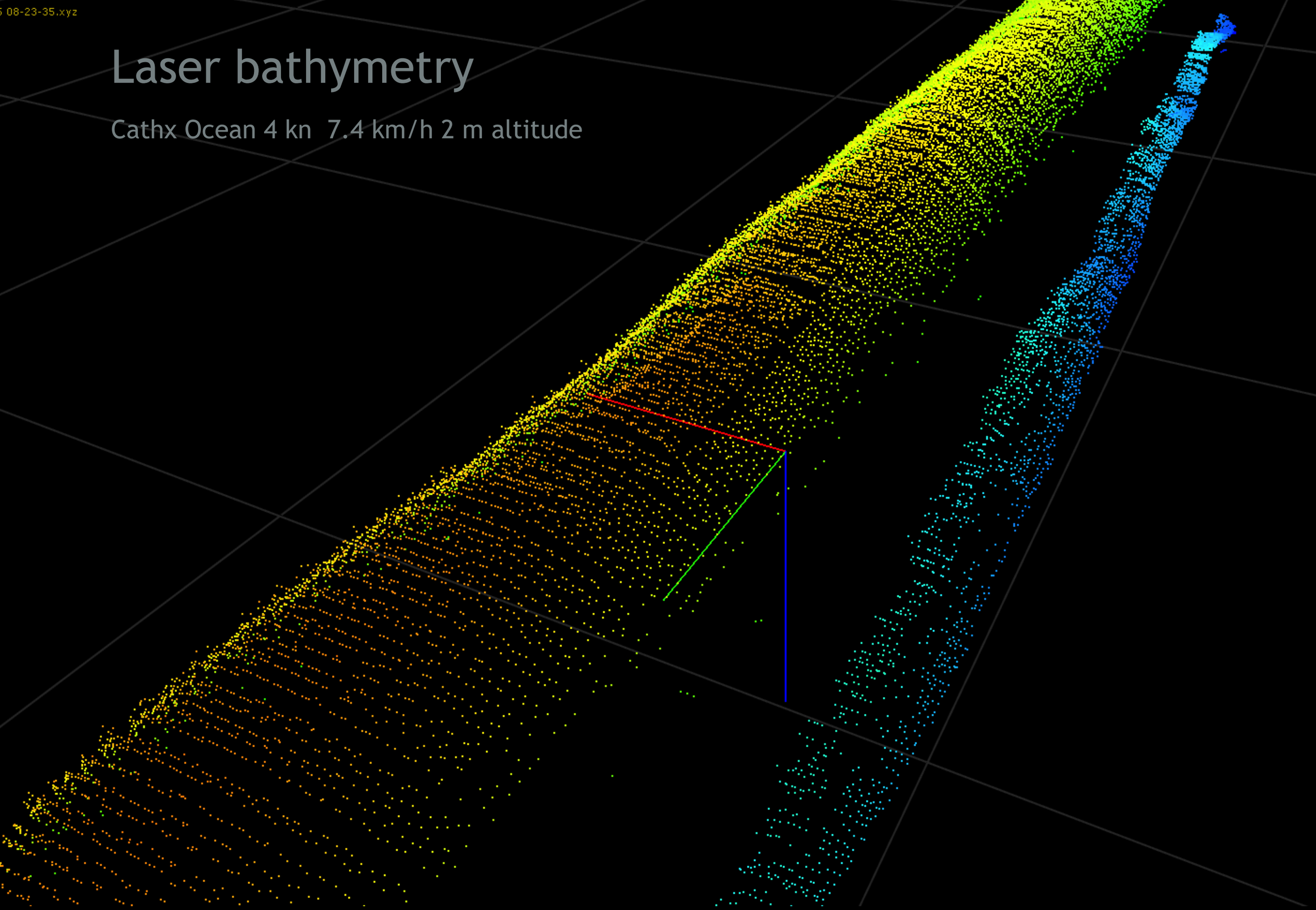

REACH SUBSEA

MMT

Multibeam bathymetry

Kongsberg EM2040 Q 6 kn 5 m alt

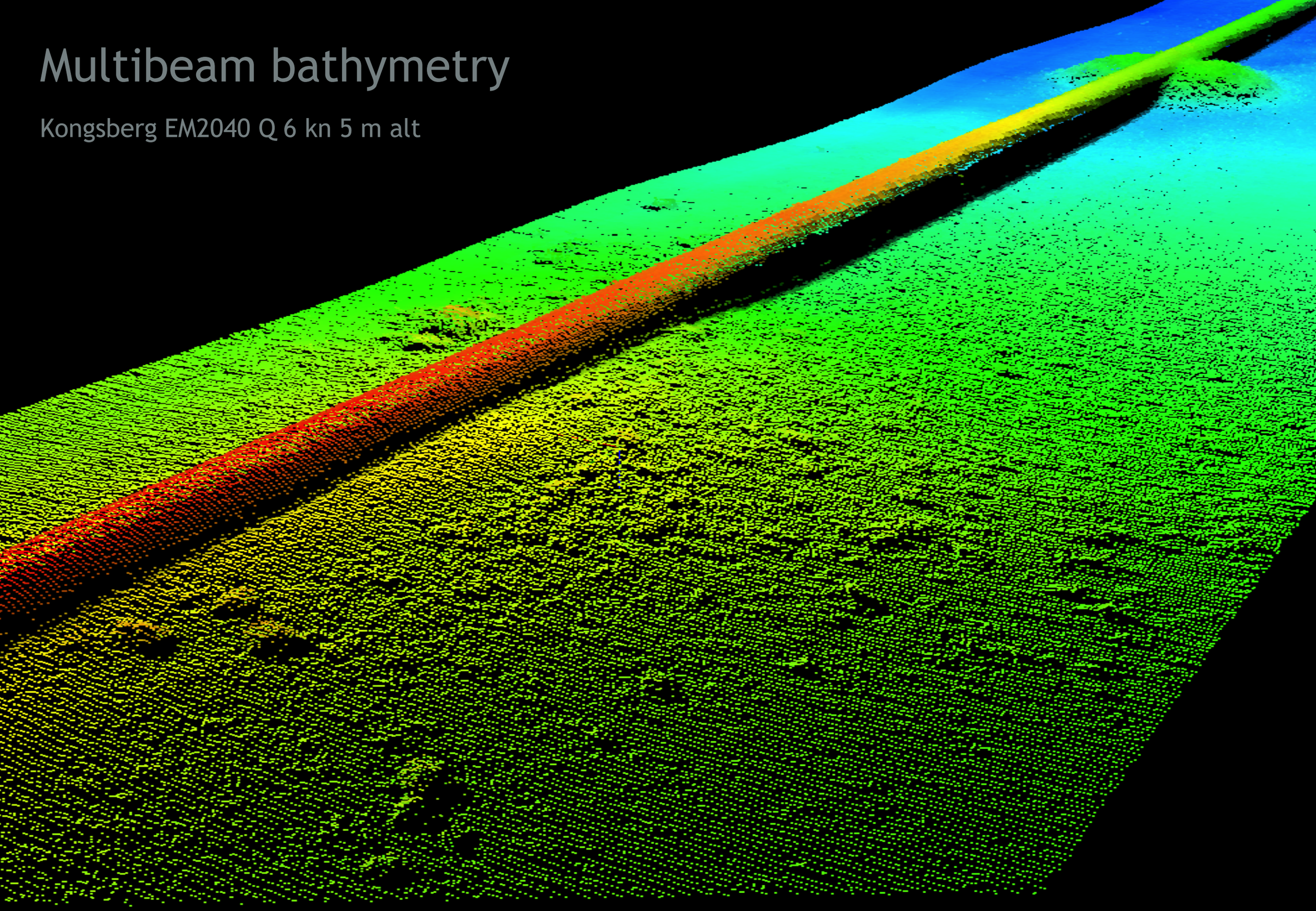

REACH SUBSEA

MMT

Gridded Multibeam bathymetry

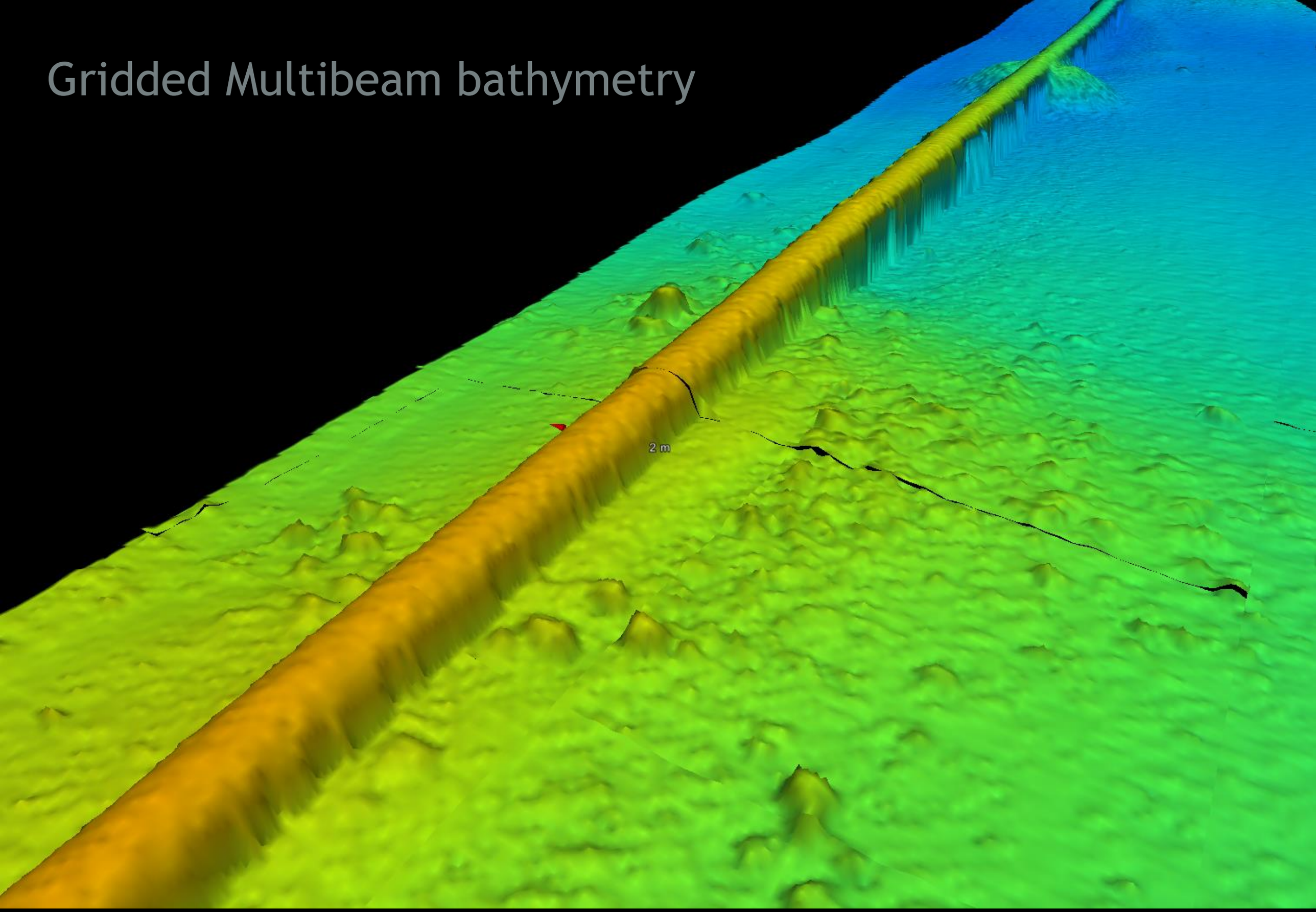

REACH SUBSEA

MMT

MBES EM 2040

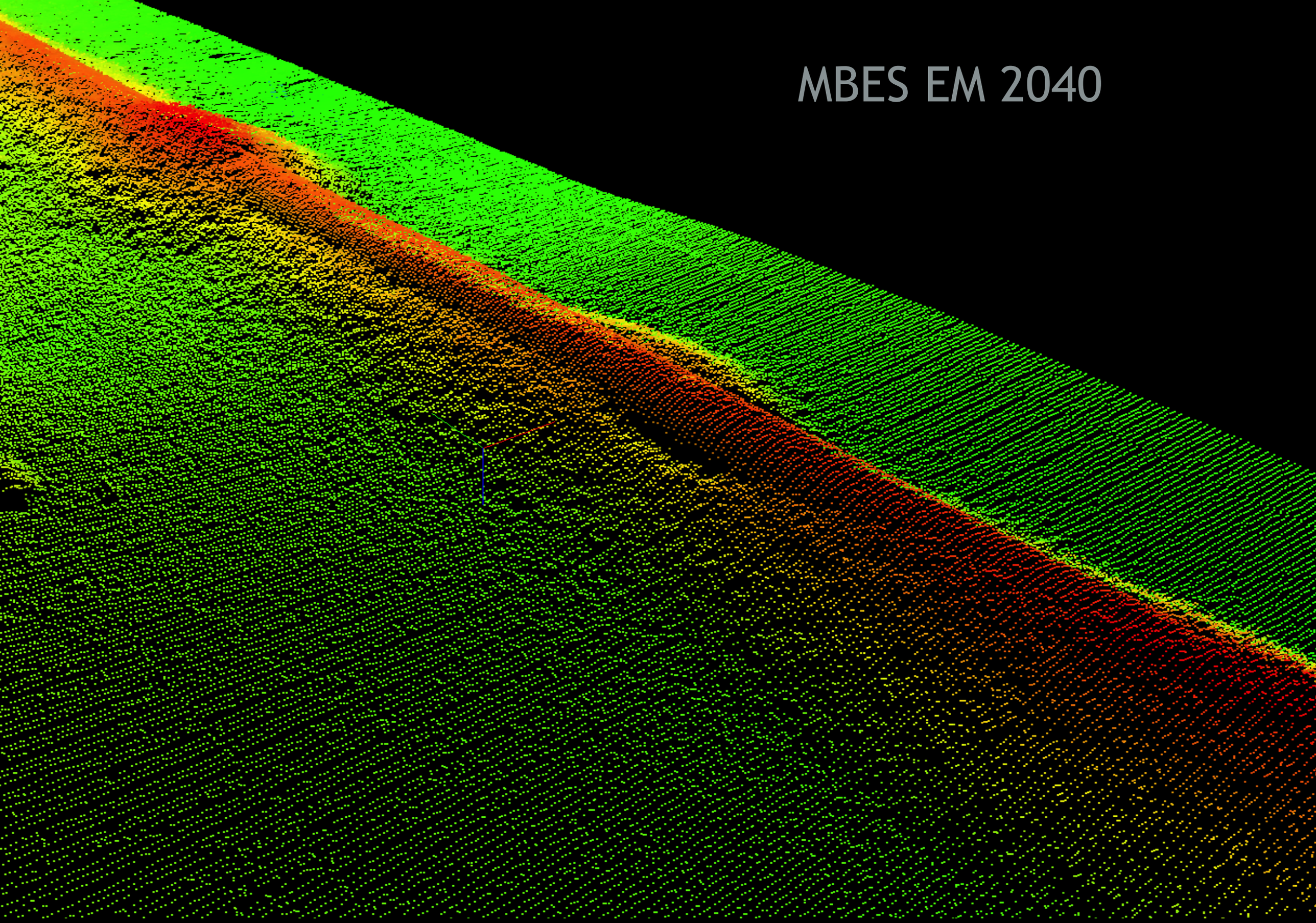

REACH SUBSEA

MMT

Mars shipwreck
1564 Baltic Sea

REACH SUBSEA

MMT

Mars shipwreck
1564 Baltic Sea

REACH SUBSEA

MMT

2 cm grid

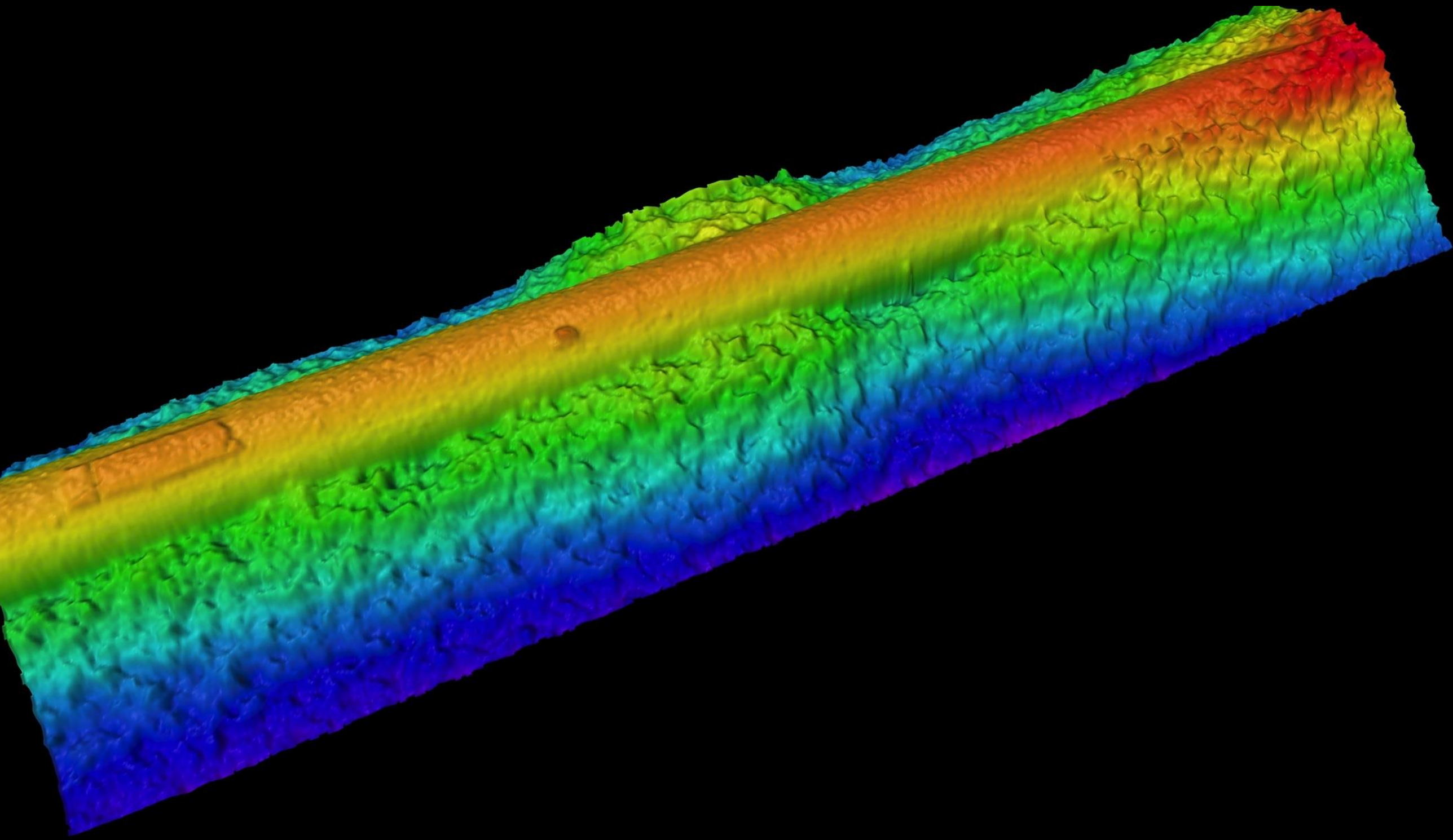

REACH SUBSEA

MMT

Images draped on Laser bathymetry

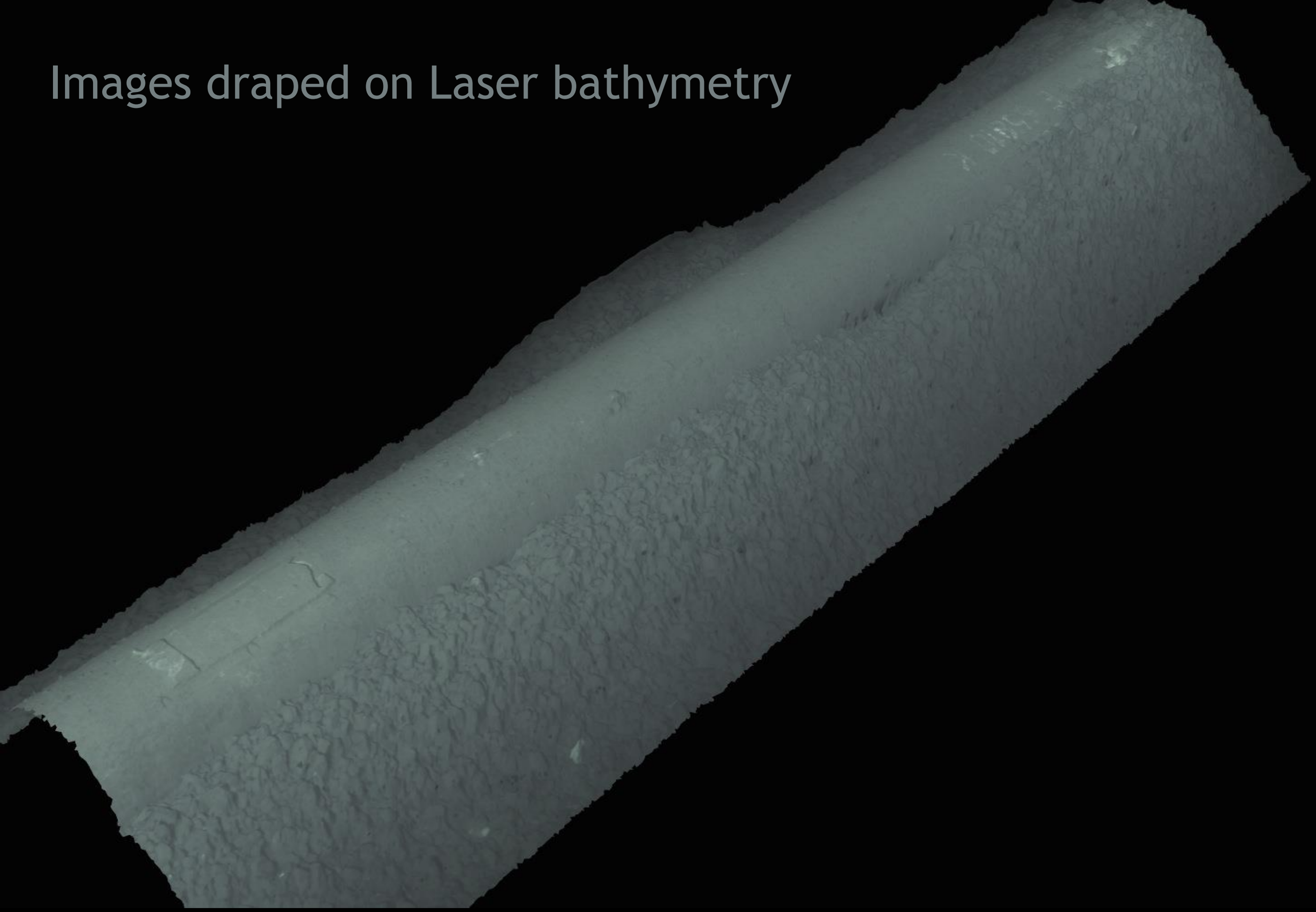

REACH SUBSEA

MMT

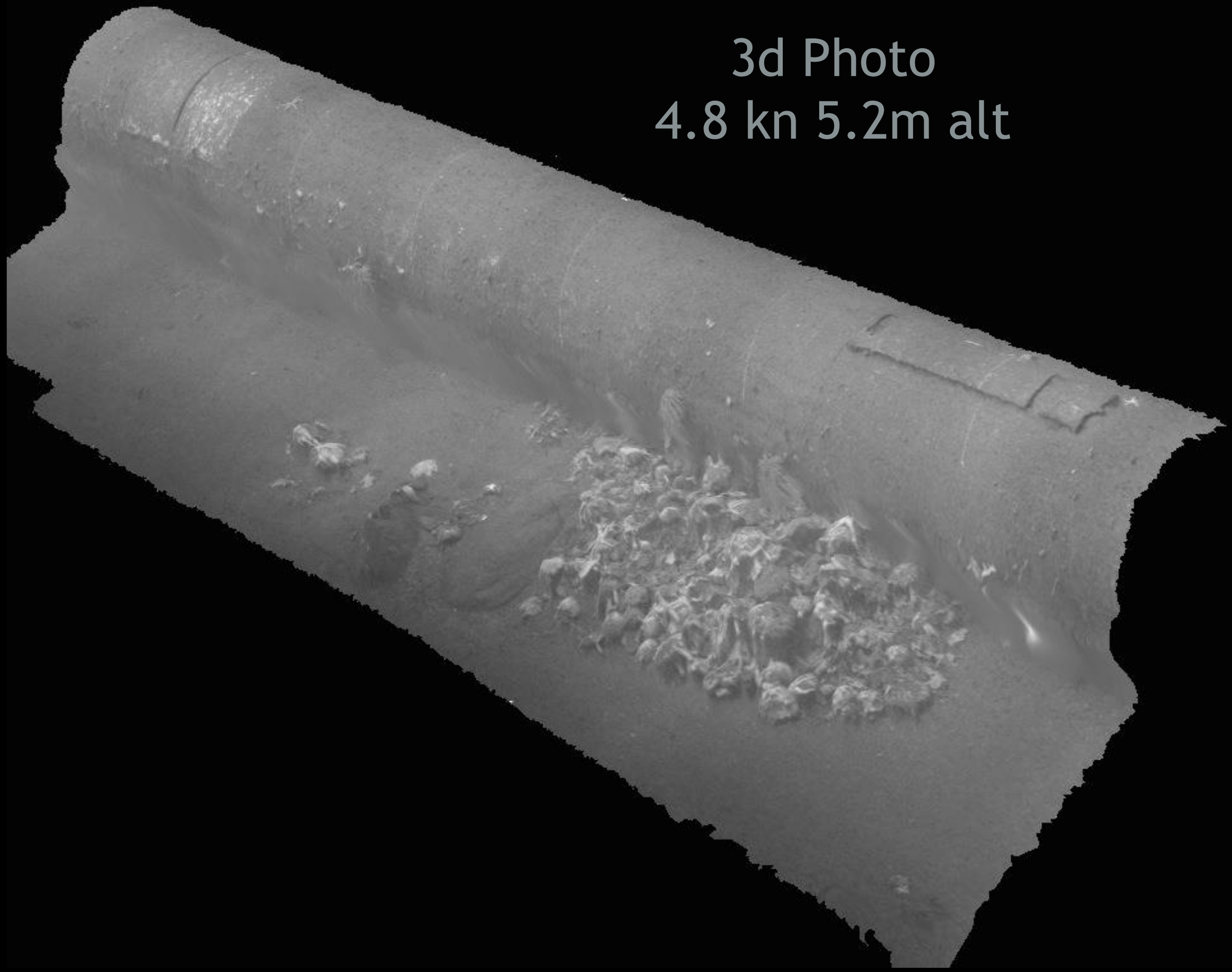

REACH SUBSEA

MMT

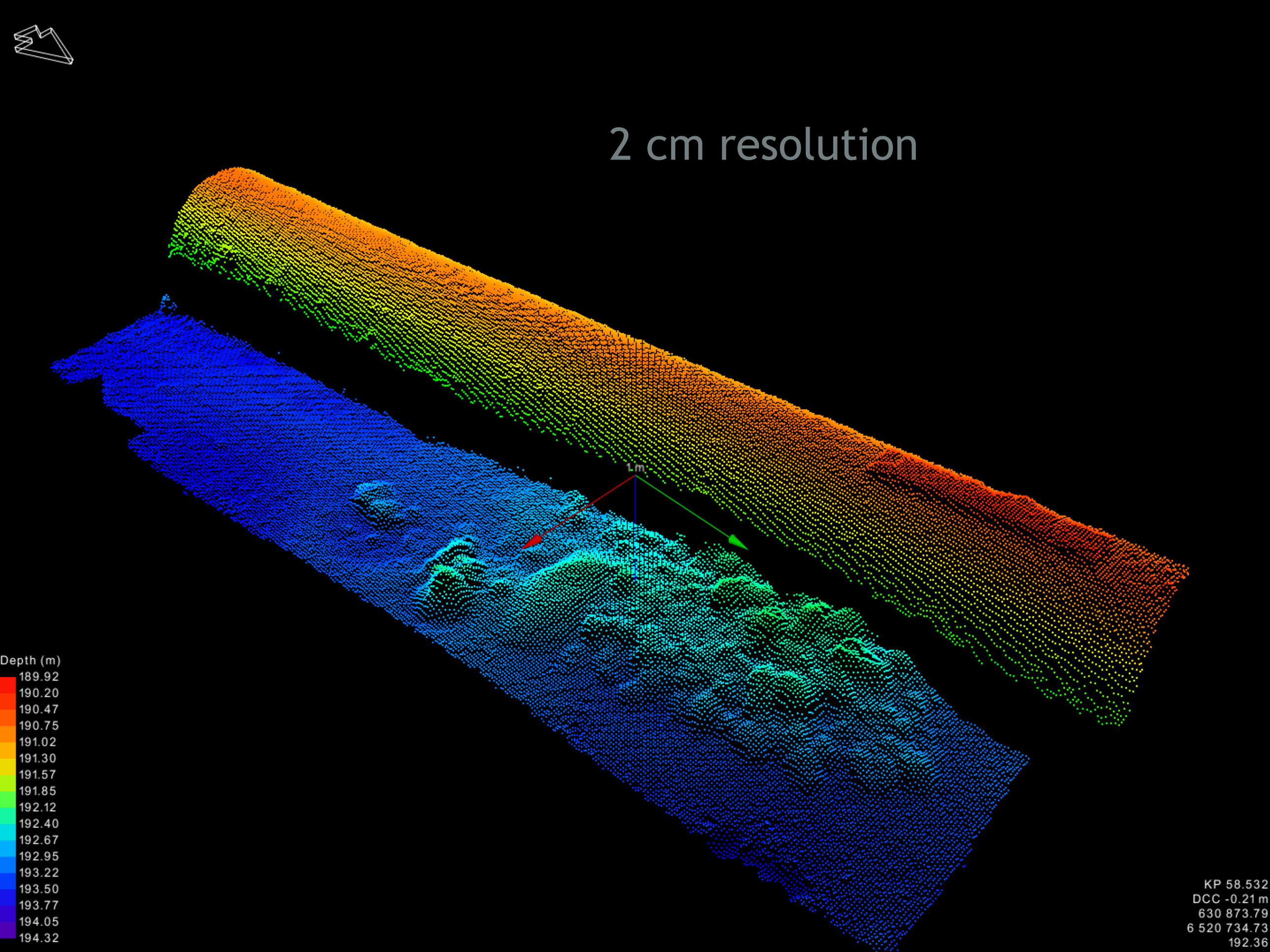
2 cm resolution
1 m
Depth (m)
189.92
190.20
190.47
190.75
191.02
191.30
191.57
191.85
192.12
192.40
192.67
192.95
193.22
193.50
193.77
194.05
194.32
KP 58.532
DCC -0.21 m
630 873.79
6 520 734.73
192.36

Eventing and profiling

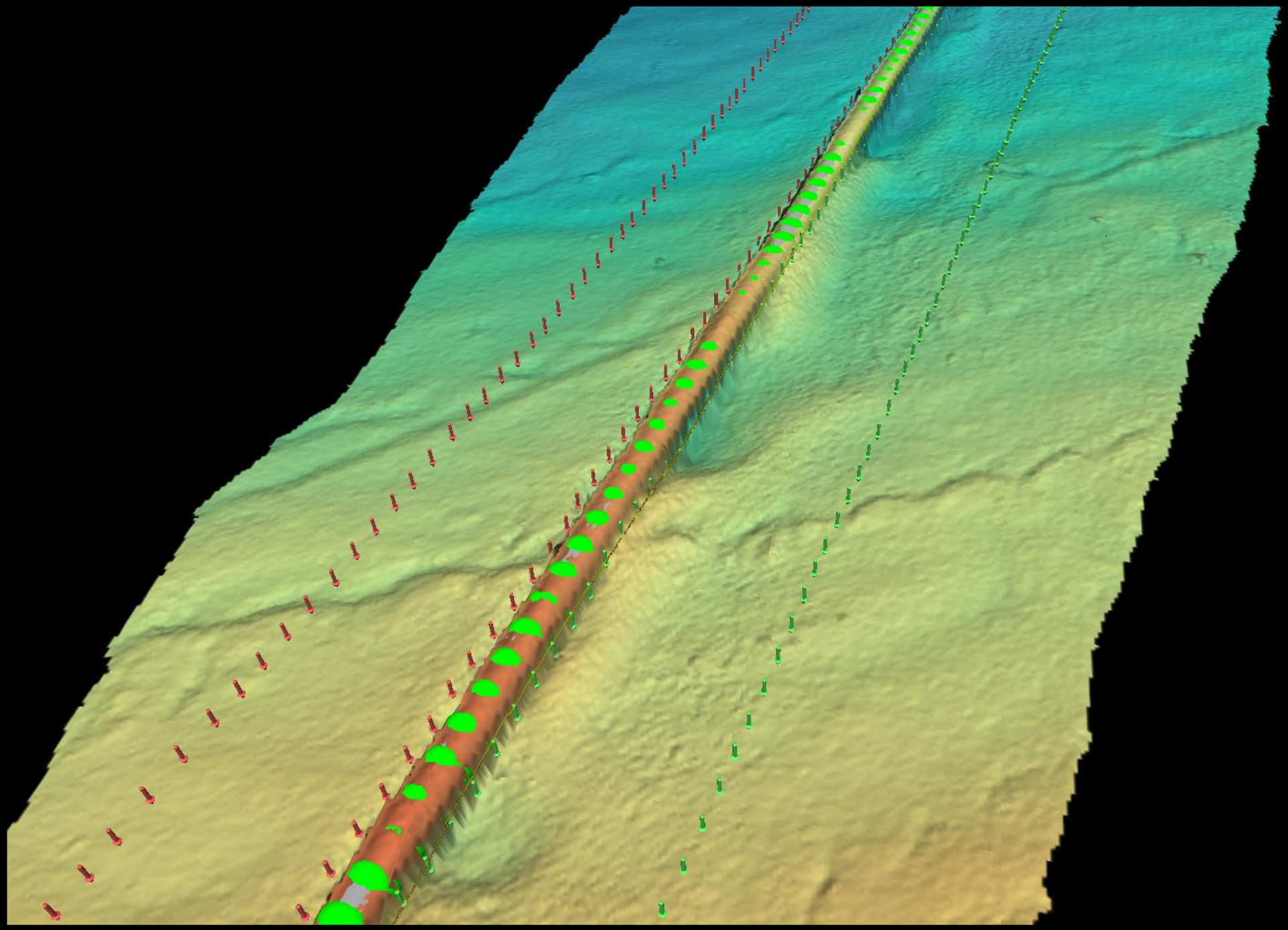

EIVA Navimodel C5P

REACH SUBSEA

MMT

Geophysics

Edgetech 600-1600 kHz 2205 (DF MP 600)
4.2 kn 5 m alt

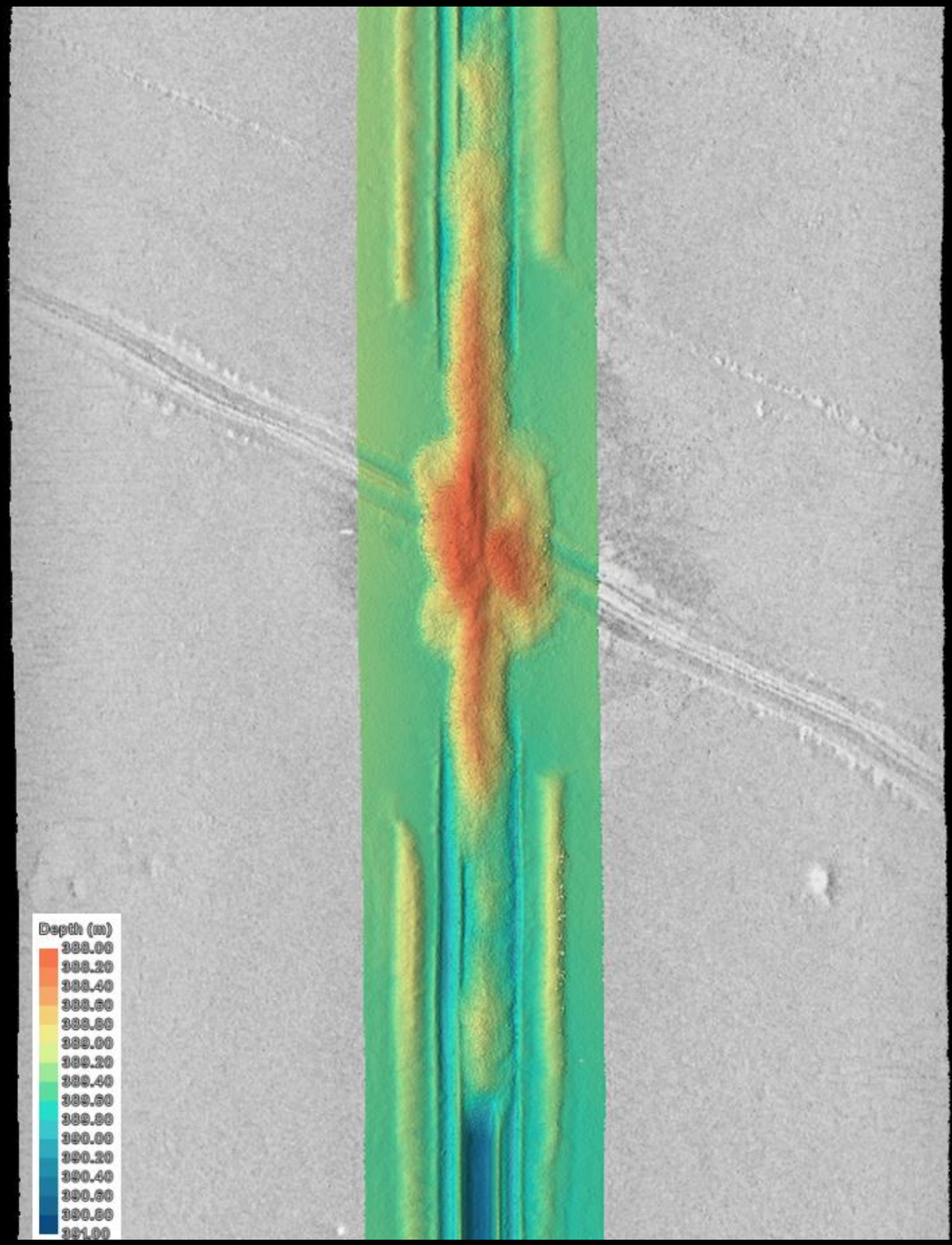

REACH SUBSEA

MMT

Sub bottom profiling

Edgetech DW 106 1-10 kHz 4.2 kn 5 m alt

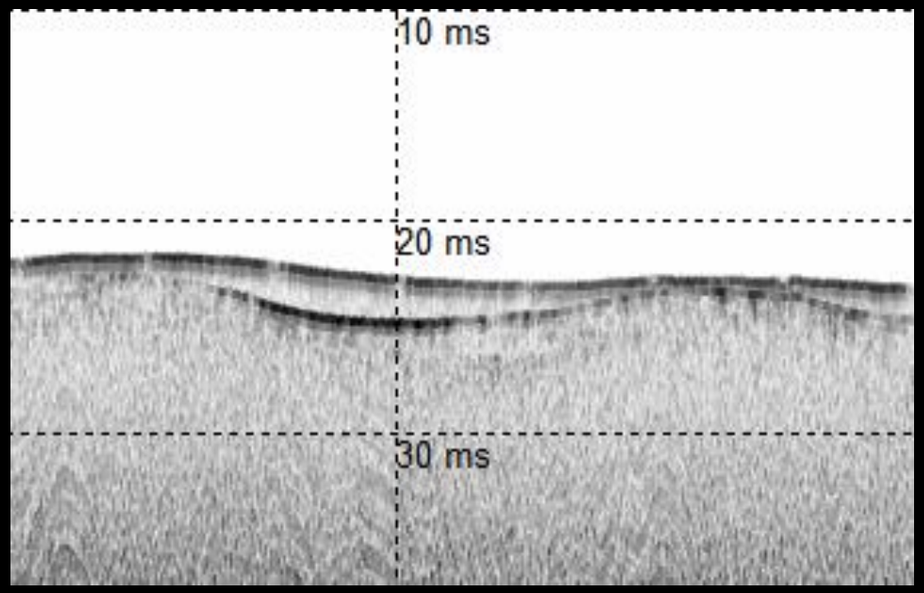

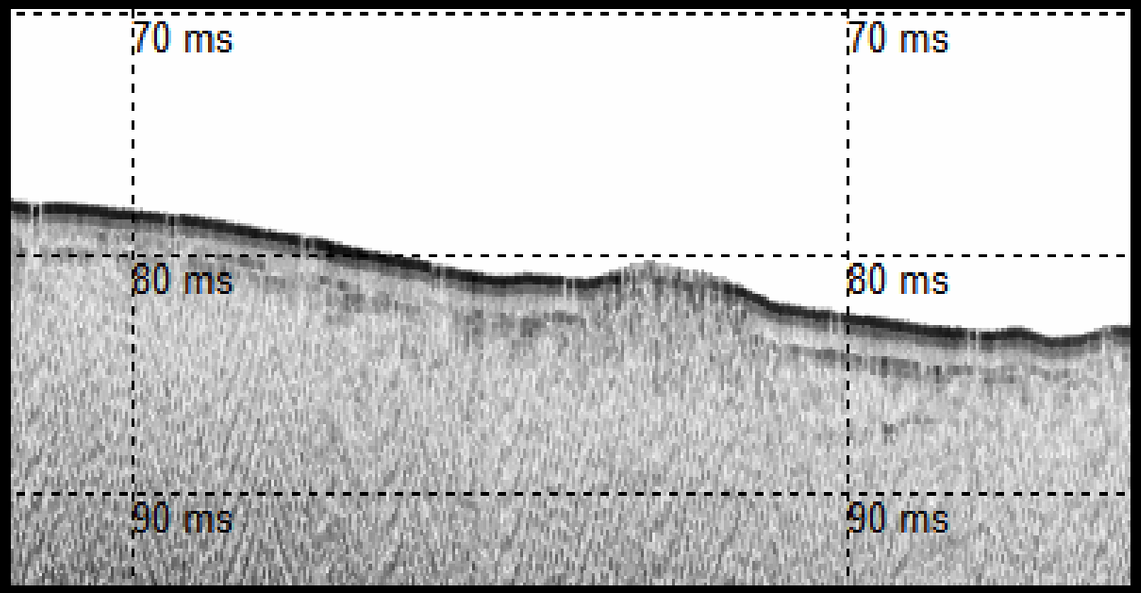

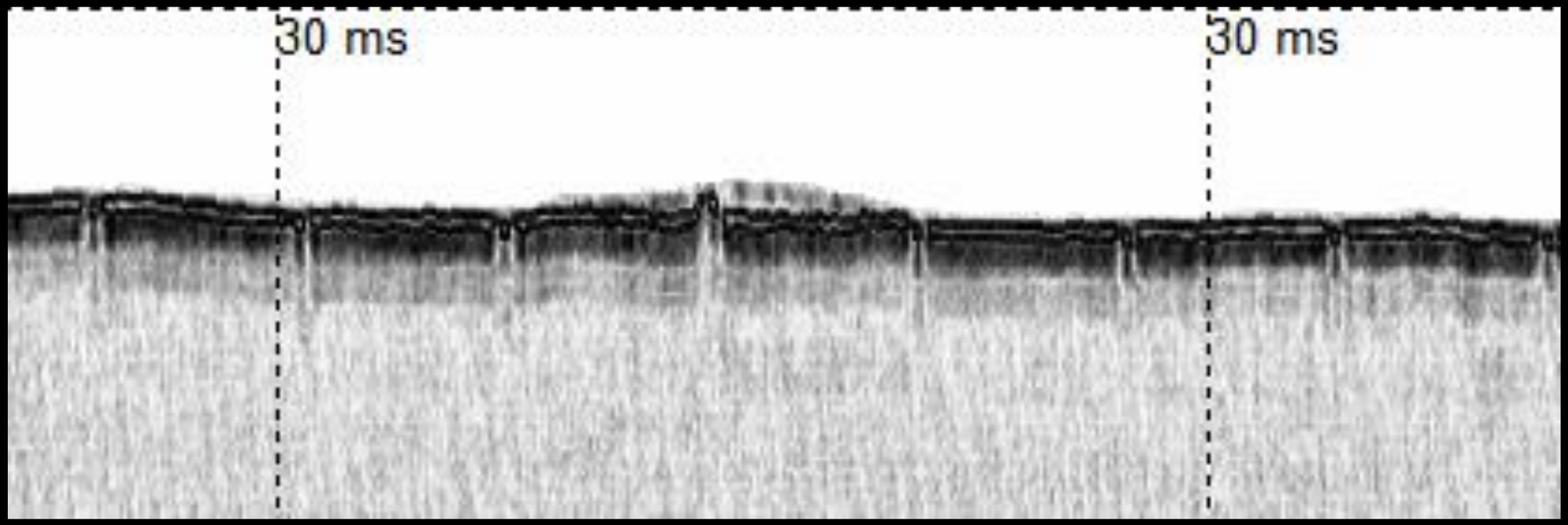

REACH SUBSEA

MMT

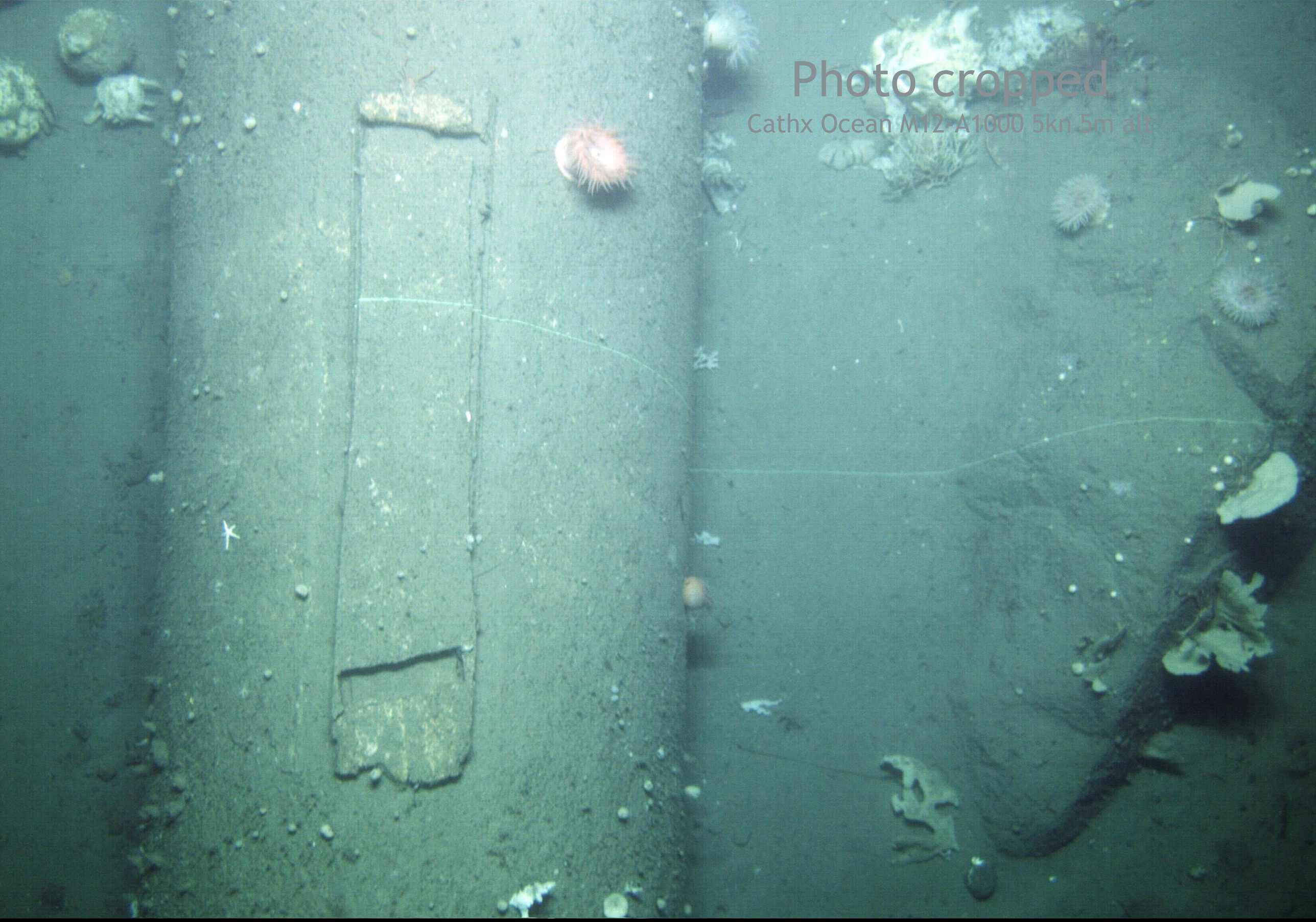
Photo cropped
Cathx Ocean M12-A1000 5kn 5m alt

Pipeline Inspection

Video For comparison

REACH SUBSEA

MMT

Still Image 5 m above pipe 4.2 kn

REACH SUBSEA

MMT

Photo Mosaic

Draped on 3d model 4.8 kn 5.2 m alt

REACH SUBSEA

MMT

Pipe line survey data

Results from trials in January 2015.

Tests:
Accuracy, Efficiency, Quality, Comparison to previous work.

Why SROV instead of AUV? Operation, Robustness, Data flow, Power
Results More than 50% time saving operation
75% time saving post processing

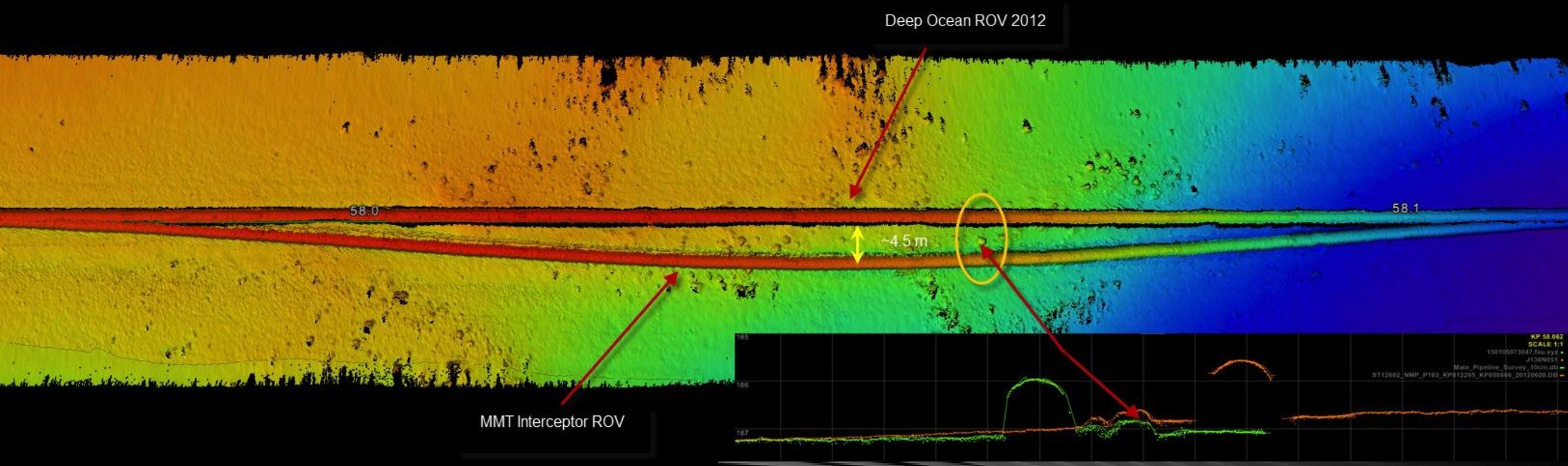

REACH SUBSEA

MMT

Speed - Production

• Top speed	Over 8 knots 10 kn possible	over 14.8 km/h 14816 m/h
• 1m above pipe	2-4 knots	3.7 – 7.4 km/h 3700-7400 m/h
• 4m above pipe	4-6 knots	7.4 – 11.1 km/h 7408 -11 112 m/h
• 10 m above seafloor	6-7 knots	11.1 – 12.964 km/h 11 112 – 12 964 m/h
• Service interval	100 h / 500 h	
• Weather sensitivity	4 m Hs	

- Speed reduction — Dramatic topography
  Depth over 900 m
- Production over time — Modestly 200 km/day
- SROV – ROV — Faster, more stable, better resolution
- SROV – AUV — Faster, power, dataflow, handling

REACH SUBSEA

MMT

To conclude

- Survey speed — 2-7 knots
- Stability — High
- Positioning — Very Accurate
- Cable drag — Managable to 1000 m depth
- Bathymetry — 99.6% accepted points
- Still Photography — Hi res accurate GIS perspective
- Laser — Extreme resolution
- Geophysics — Crispy
- Fit for purpose — Yes

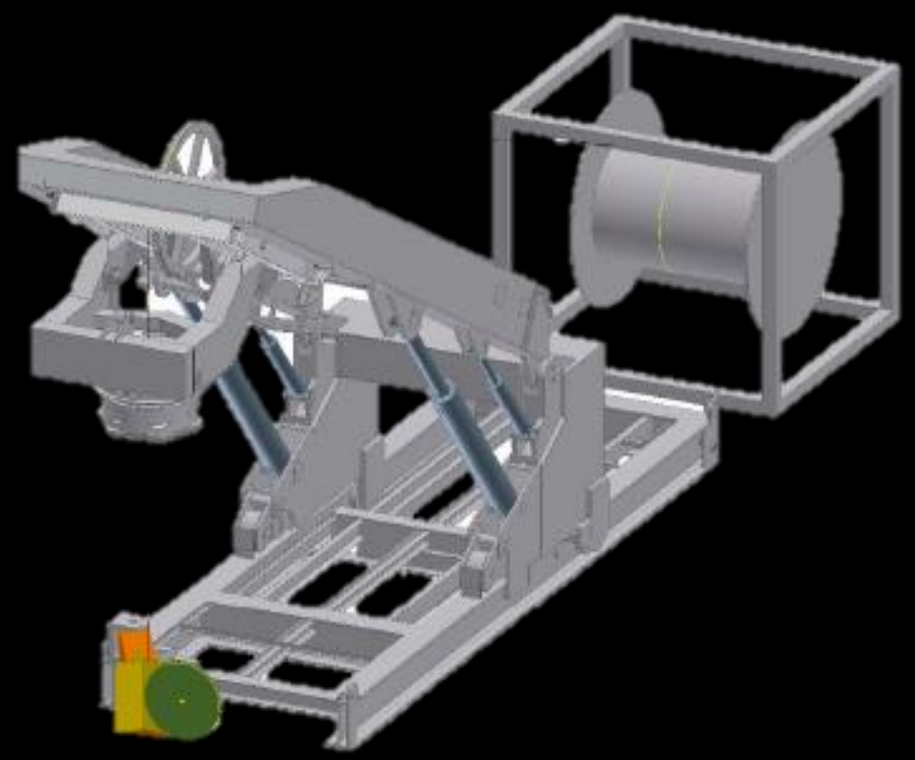

Launch & Recovery

Ongoing

- Multibeam — Dual ping, Pipe track
- Laser — Graphical User Interface development
- Laser — Post processing integration (point cloud data)
- Photo — Process bottleneck streamlining
- iUSBL — Calibration ??
- Propellers — Higher pitch

R&D

Cathodic protection Measuring
Multibeam SBP
Pipe Tracking

REACH SUBSEA

MMT

Knarr Pipeline Survey

- First commercial survey undertaken in March 2015
- 106 km Knarr Pipeline for Gassco
- 140 – 400 m of water
- Surveyed in 17 hours
- Average survey speed 3.33 knots
- ROV operated at 4.5 knots survey speed

REACH SUBSEA

MMT

Knarr Pipeline Survey - Results

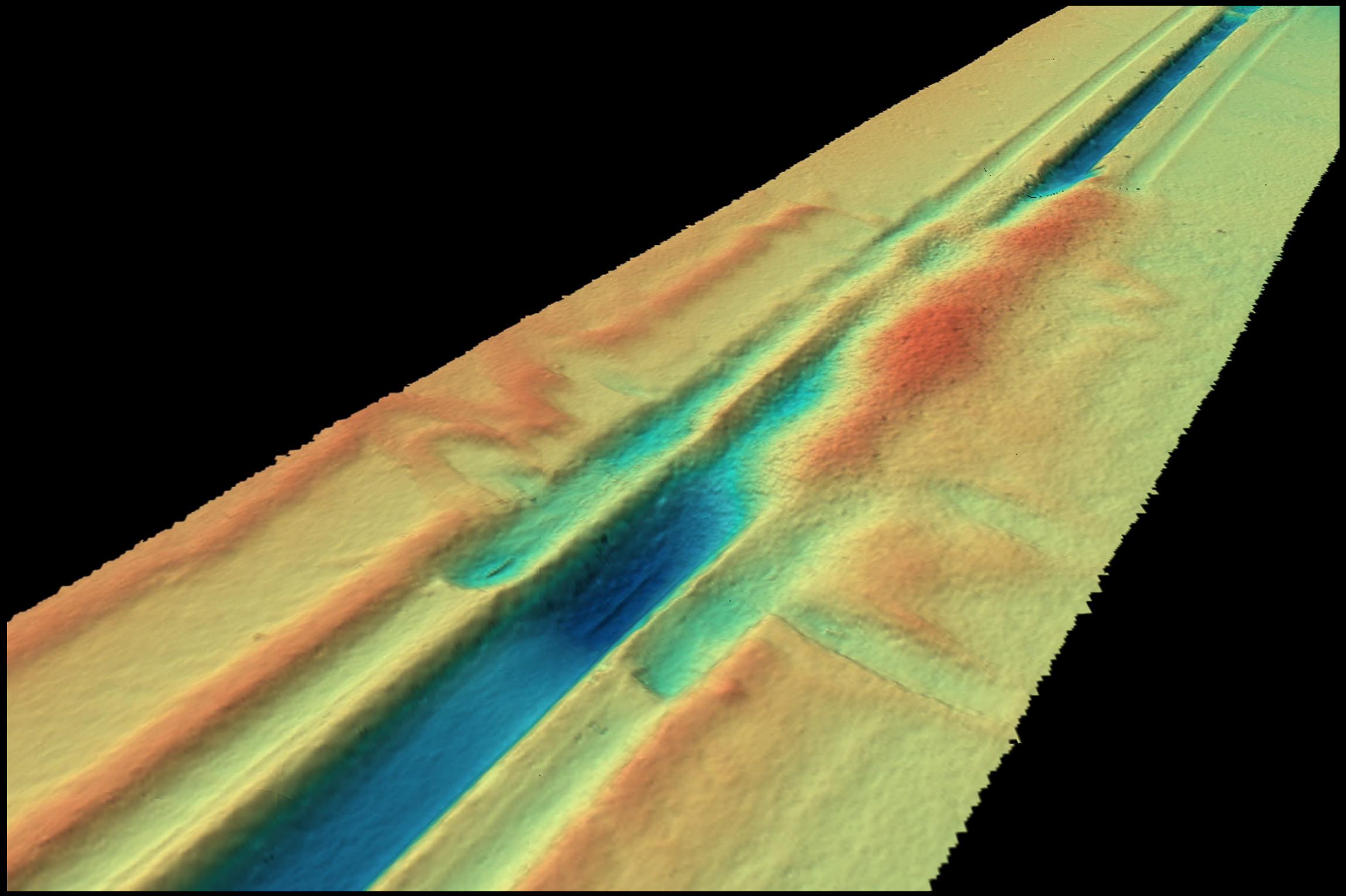

REACH SUBSEA

MMT

Knarr Pipeline Survey - Results

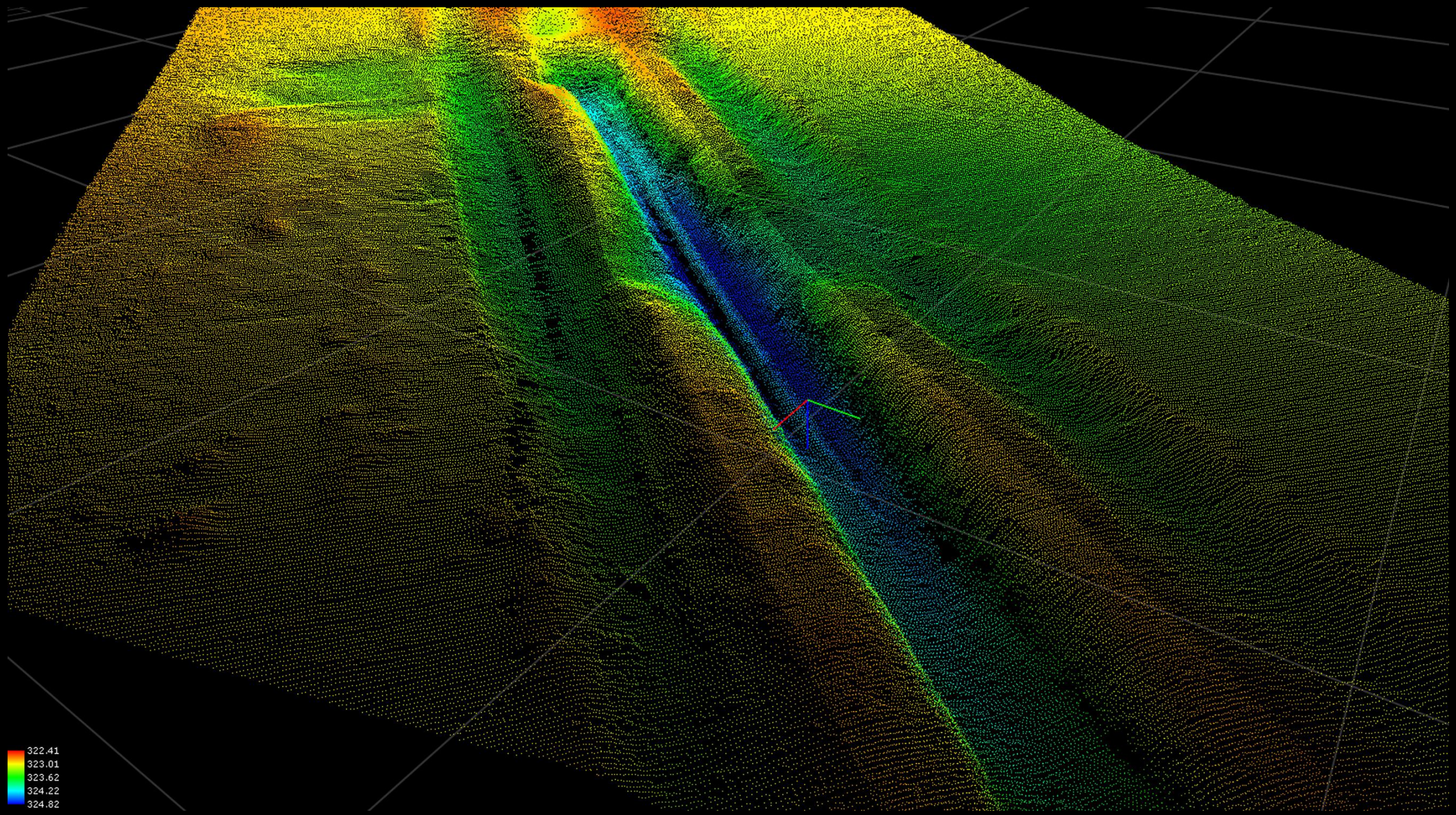

REACH SUBSEA

MMT

Knarr Pipeline Survey - Results

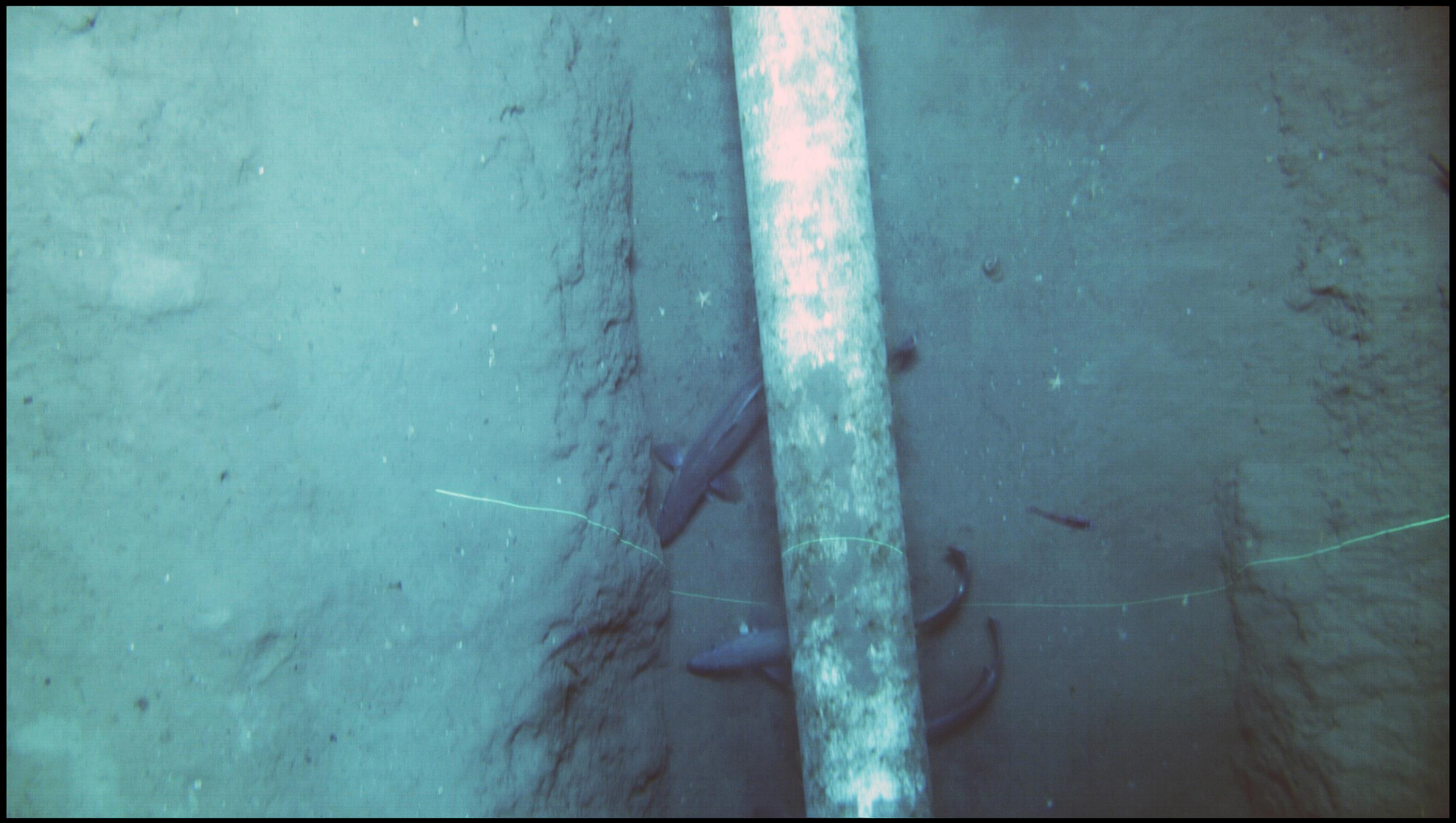

REACH SUBSEA

MMT

Thank you! Questions?

Thomas Mennerdahl
thomas.mennerdahl@mmt.se
+46 707505410

Reachsubsea.no
Mmt.se

MMT Head Office:
MMT Sweden AB
Sven Källfelts Gata 11
SE-426 71 Västra Frölunda, Sweden
Phone: +46 (0)31 762 03 00

Reach Subsea AS Office
Haraldsgata 190
Haugesund
www.Reachsubsea.no

MMT UK office:
2A Banbury Office Village, Noral Way
Banbury, Oxon, OX16 2SB, UK
Phone: +44 1295 817 740
MMT e-mail: info@mmt.se